Electrolux PROFESSIONAL

ITEM #

MODEL #

NAME #

SIS #

AIA #

Peelers
Vegetable Peeler, 5kg with abrasive plate & stainless steel table

603849 (T5STN) Vegetable Peeler, 5kg with abrasive plate and stainless steel table - 220-240V/1/50

Short Form Specification

Item No.

Constructed in stainless steel with a transparent removable lid in special high resistant plastic. The removable rotating plate is covered with a removable rotating plate covered in very resistant abrasive material (silicon carbide). An interlocking safety magnetic devices will stop the machine from operating when the lid or door is opened. The electronic controls and motor have IP55 protection. Simple control panel with ON/OFF buttons and timer. Supplied with an abrasive plate and stainless steel filter table.

APPROVAL:

Main Features

- Supplied with an abrasive plate and stainless steel filter table as standard.
- Removable rotating plate covered in very resistant abrasive material (silicon carbide).
- Products downloading made easy thanks to the specific chute, activating manually the disc rotation to channel the product out of the peeling chamber.
- Magnetic detectors will stop the machine from operating when the lid and/or door are opened.
- Red OFF, green ON buttons and timer knob.
- Productivity suitable for 30-100 meals per service.

Construction

- Stainless steel construction with transparent lid in damage resistant plastic.
- IP55 waterproof control buttons.
- Transparent BPA free cover incorporates a magnetic safety system which stops the machine if lid is not properly closed.

Included Accessories

- 1 of Abrasive plate for 5 kg vegetable peeler (T5S) — PNC 653182
- 1 of Filter table with sliding shelf, pre-assembled — PNC 653783

Optional Accessories

- Washing plate for 5 kg vegetable peeler — PNC 653057 ❑
- Knife plate for 5 kg vegetable peeler (T5S) — PNC 653183 ❑
- Filter table with sliding shelf, pre-assembled — PNC 653783 ❑
- Filter table with sliding shelf — PNC 653784 ❑

Peelers
Vegetable Peeler, 5kg with abrasive plate & stainless steel table

Front

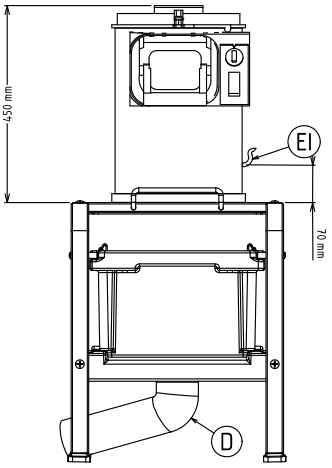

Side

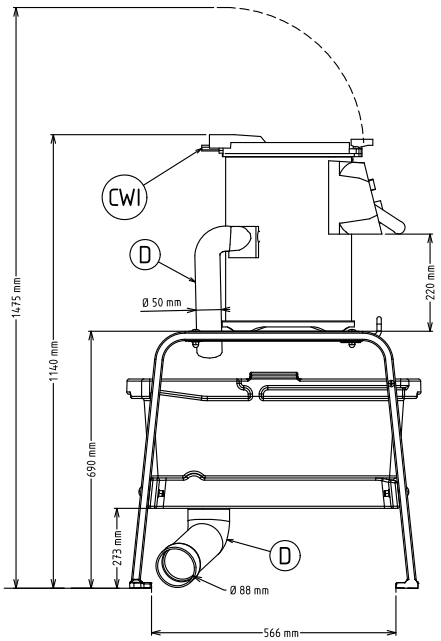

CWI1 = Cold Water inlet 1 (cleaning)
D = Drain
EI = Electrical inlet (power)

Top

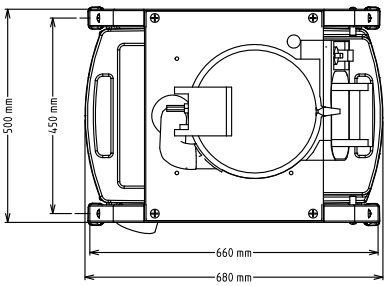

Electric

Supply voltage:	
603849 (T5STN)	220-240 V/1N ph/50/60 Hz

Capacity:

Performance (up to):	80 kg/hour
Capacity:	5 litres

Key Information:

External dimensions, Width:	494 mm
External dimensions, Depth:	680 mm
External dimensions, Height:	1140 mm
Shipping weight:	50 kg

The company reserves the right to make modifications to the products without prior notice. All information correct at time of printing.

2024.10.06